Field study on the construction of a flood-proof riverbank filtration well in India – challenges and opportunities

F. Musche, C. Sandhu, T. Grischek, P. S. Patwal, P. C. Kimothi, A. Heisler

Contents

- Riverbank filtration (RBF) and effects of floods
- Flood-proof wells in Europe
- Conceptual design for flood-proof well in India
- Implementation of conceptual design
- Conclusions

Riverbank filtration and effects of floods

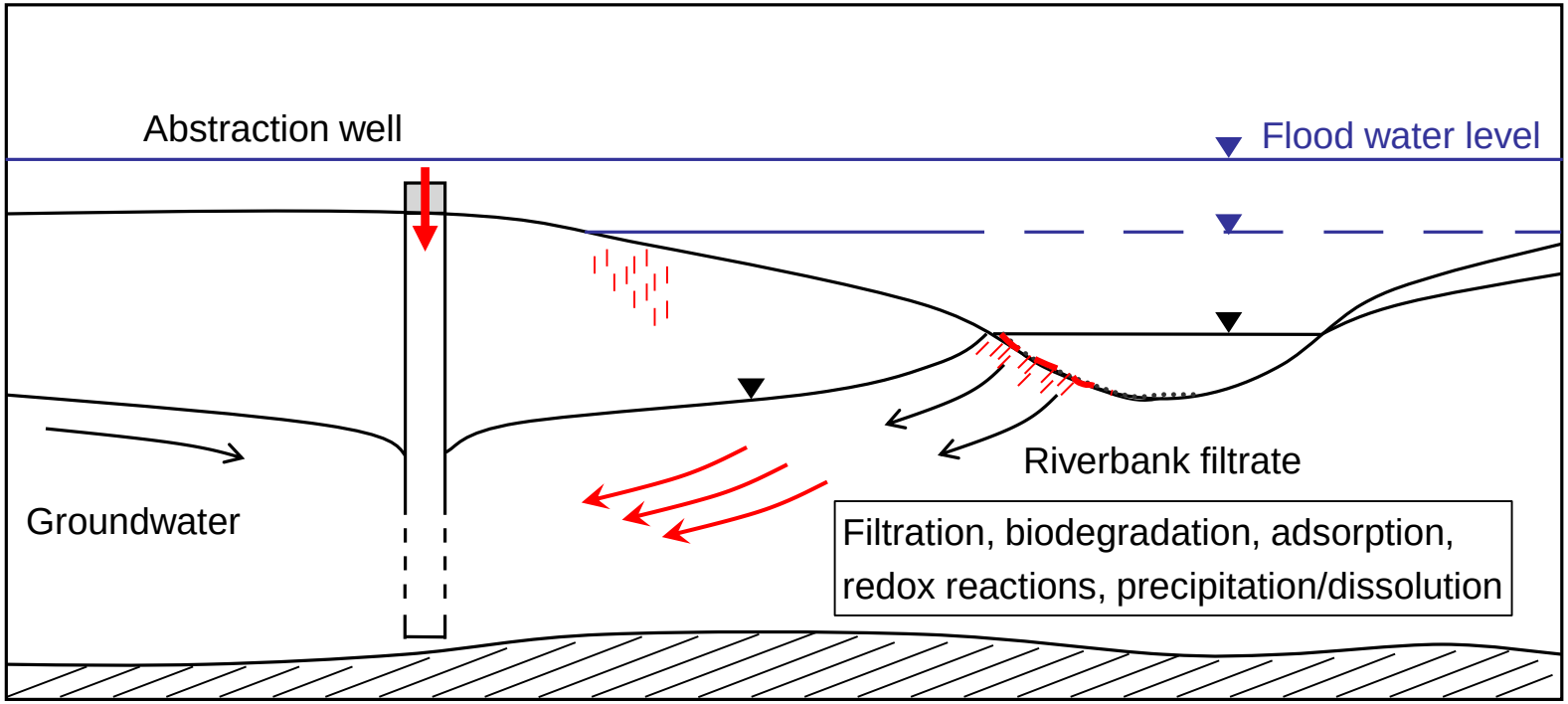

Destruction of clogging layer,
High pressure gradient,
Submerge unsaturated regions

→ less retention time, remobilisation

→ less removal

Inundation of well

→ **direct entry of water, damage**

→ **contamination, inoperativeness**

RBF site in Srinagar, Uttarakhand

- Population: 150,000, Altitude: 560 mASL
- Monsoon: Heavy rainfall → annual flood events
- Extreme (landslide-generated) floods: 1894, 1970, **2013**

Flood events in Srinagar

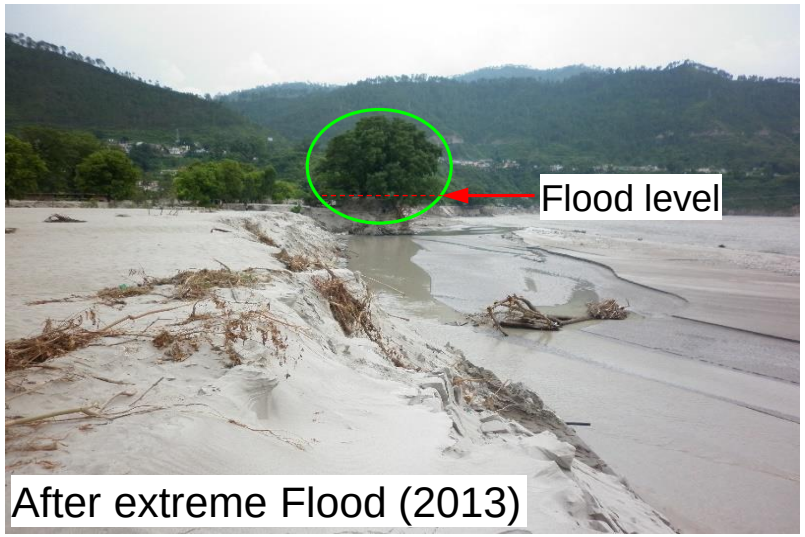

Damage and coliform counts after flood 2013

- RBF well not operational
  - 1-3 m sand deposition, limited site access, damage to equipment

Damage and coliform counts after flood 2013

- RBF well not operational
  - 1-3 m sand deposition, limited site access, damage to equipment

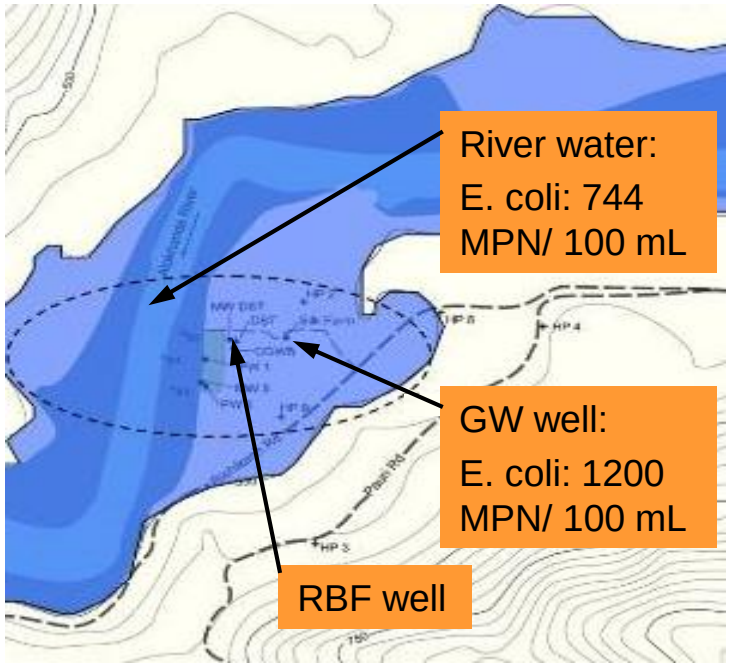

- Contamination of GW well

Need to develop and implement flood-proofing measures

Vulnerable points at common RBF well

- No Sealing of annular space of well bore
- Direct contamination through openings and fissures

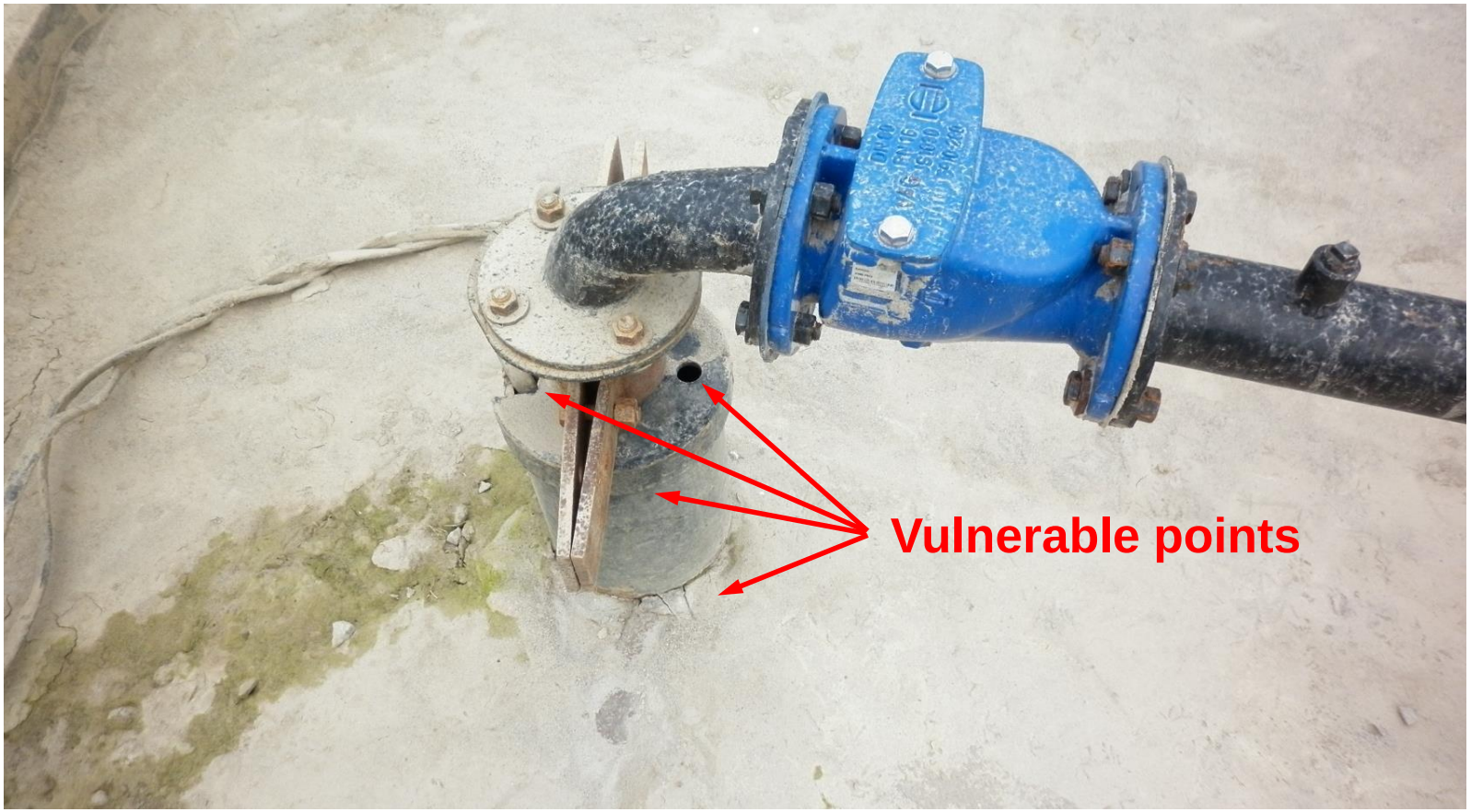

Flood-proof wells in Europe

- Sealing of annular space of well bore
- DVGW W122: Well chamber above highest flood level

→ **Otherwise watertight structure + buoyancy force compensation**

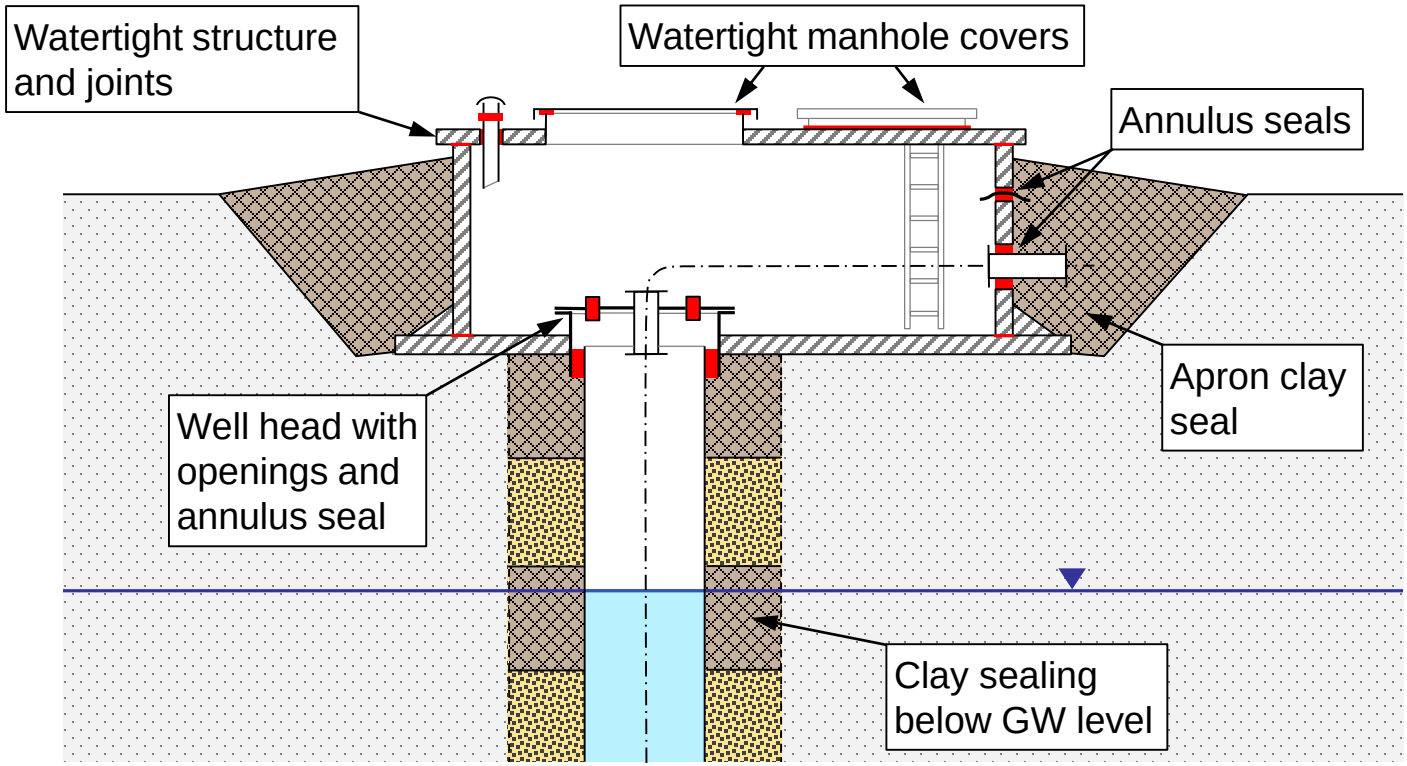

(after Treskatis, 2014)

Flood-proof wells in Europe

- Sealing of annular space of well bore
- DVGW W122: Well chamber above highest flood level

  → **Otherwise watertight structure + buoyancy force compensation**

- **Flood-proof manhole cover would be key element**

Watertight well elements in Uttarakhand, India

- Generally no construction of well chamber
  - High requirements for watertight concrete
- Flood-proof manhole covers
  - Not available → Import
  - Maintenance intensive,
    heavy loads, high temperatures and humidity
- Annular rubber seals
  - Not available → Import
  - Has to be custom-made for Indian standard sizes
  - Watertight Polyurethane foam
- Clay Pellets
  - Not available → bentonite powder
- **Strong welding experience of local firms**

(Nodig Bau)

(Kroener GmbH)

(Soudal)

Conceptual design of flood-proof well

- Horizontal sealing:

  Flood-proof well head + bitumen sheets + bentonite apron seal

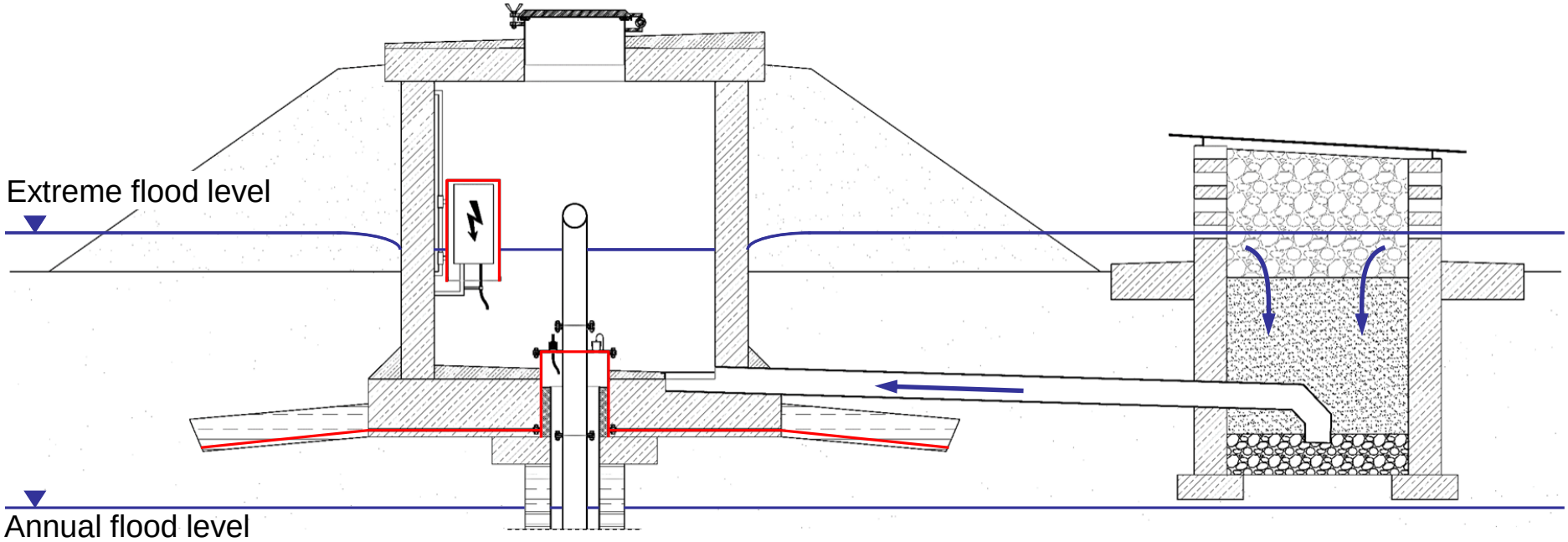

- Allow filtered flood water to enter

→ Reduce buoyancy force, water pressure, risk of contamination and post flood cleaning operations

Design for flood-proof well head

- Dimensions: DIN 4926, stainless steel

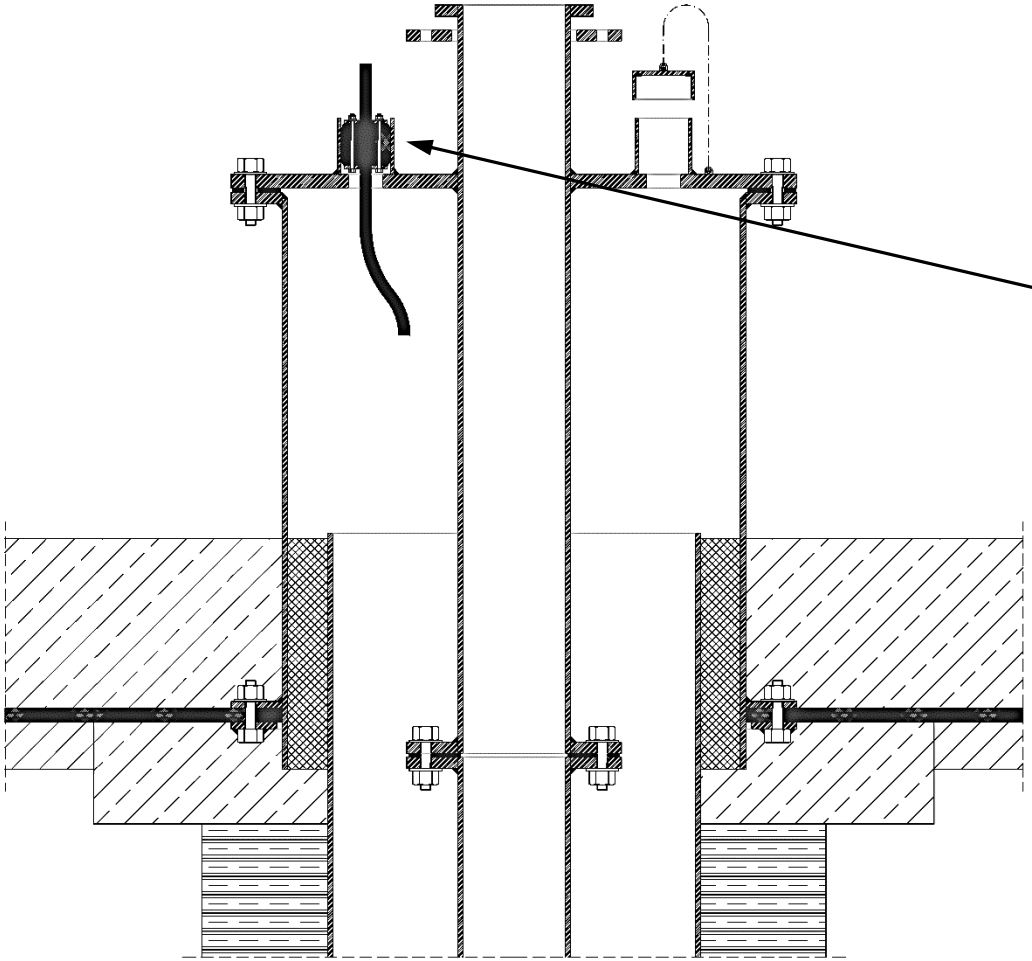

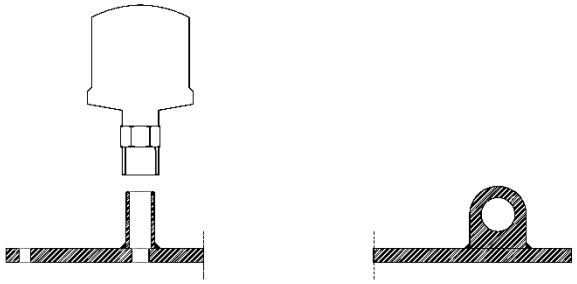

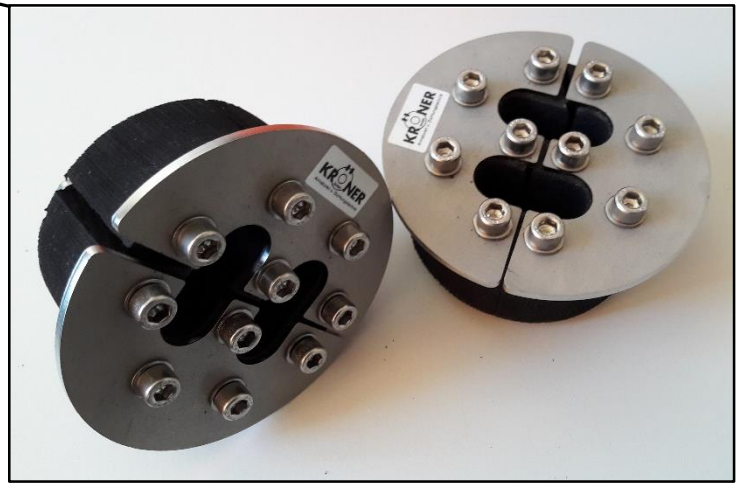

Press-ring seal brought from Germany

Fabrication and testing of flood-proof well head

Fabrication and testing of flood-proof well head

Fabrication and testing of flood-proof well head

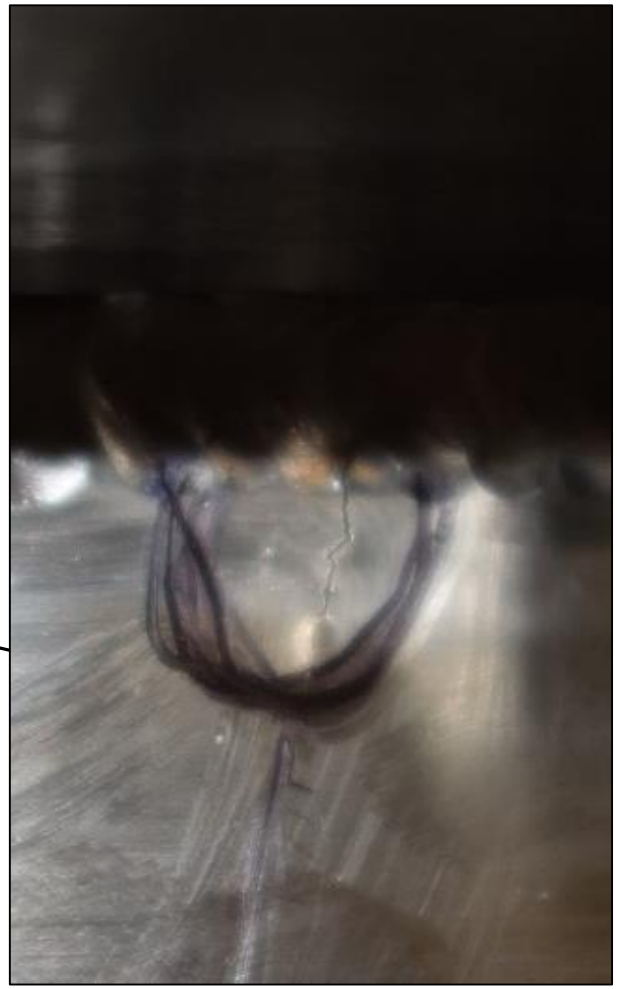

→ Watertight ≥ 0.8 bar

Installation of well head with bitumen sheets

Installation of well head with bitumen sheets

Installation of well head with bitumen sheets

Well chamber under construction

Well chamber under construction

Capital costs for flood-proofing wells

- RBF well Srinagar: Diameter 300 mm, depth 25 m, length of Johnson filter screen 8m

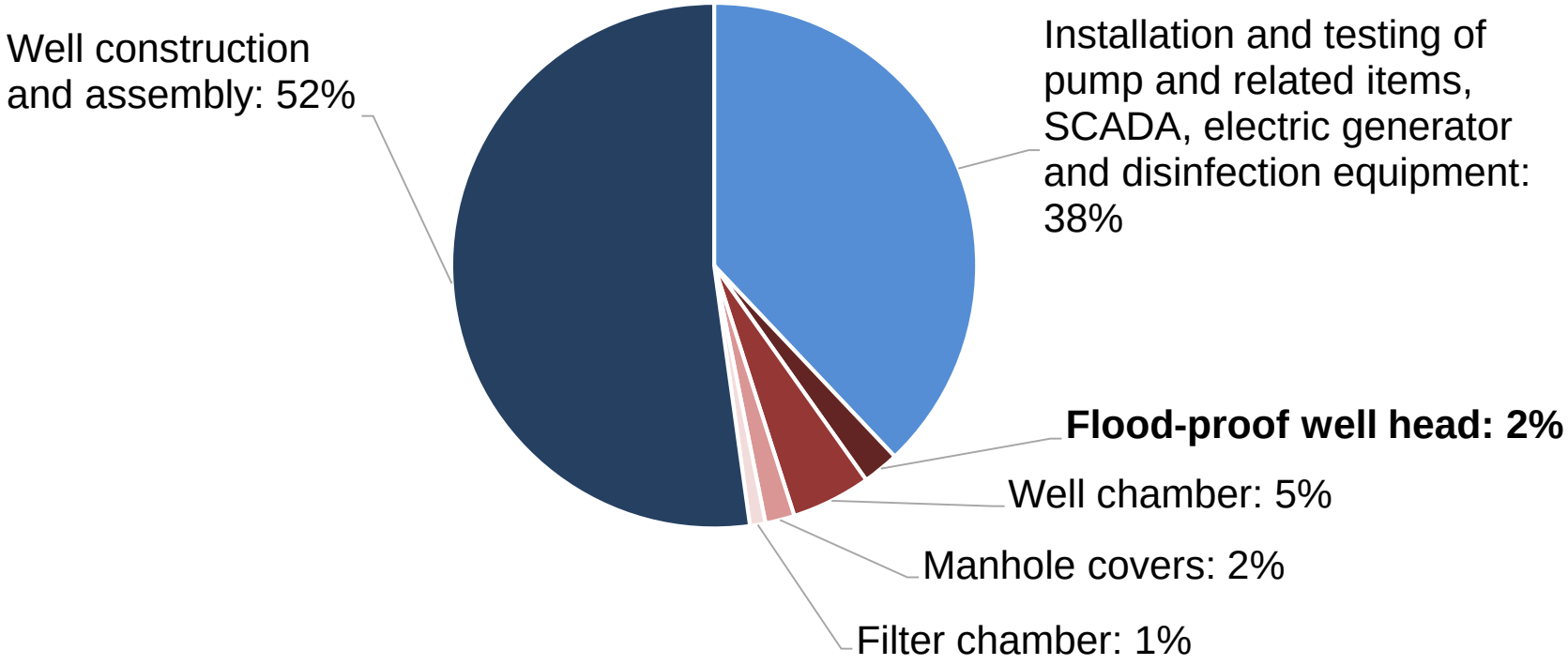

- **Flood-proofing components 10 % of total costs**

Conclusions

- Raise awareness for risks from microbial contamination of wells through information and education campaigns
- Focus on horizontal sealing of the bore hole by flood-proof well head
- Fabrication of prototype flood-proof well head and construction of well chamber at RBF site in Uttarakhand, India
- Filter chamber for allowing flood water to enter well chamber to compensate buoyancy force and water pressure
- Establish order/ market for watertight well elements (sealings) in India

SPONSORED BY THE
Federal Ministry of Education and Research

Acknowledgements: BMBF-funded project NIRWINDU – Safe and sustainable drinking water production in India by coupling natural and innovative techniques (02WCL1356A), ADB funded project “Flood-protection, capacity enhancement and redevelopment of drinking water supply infrastructure